Green Pin® Bow Shackle BN
Group : G-4163
Part : GPGHMB25
WLL : 8.5t

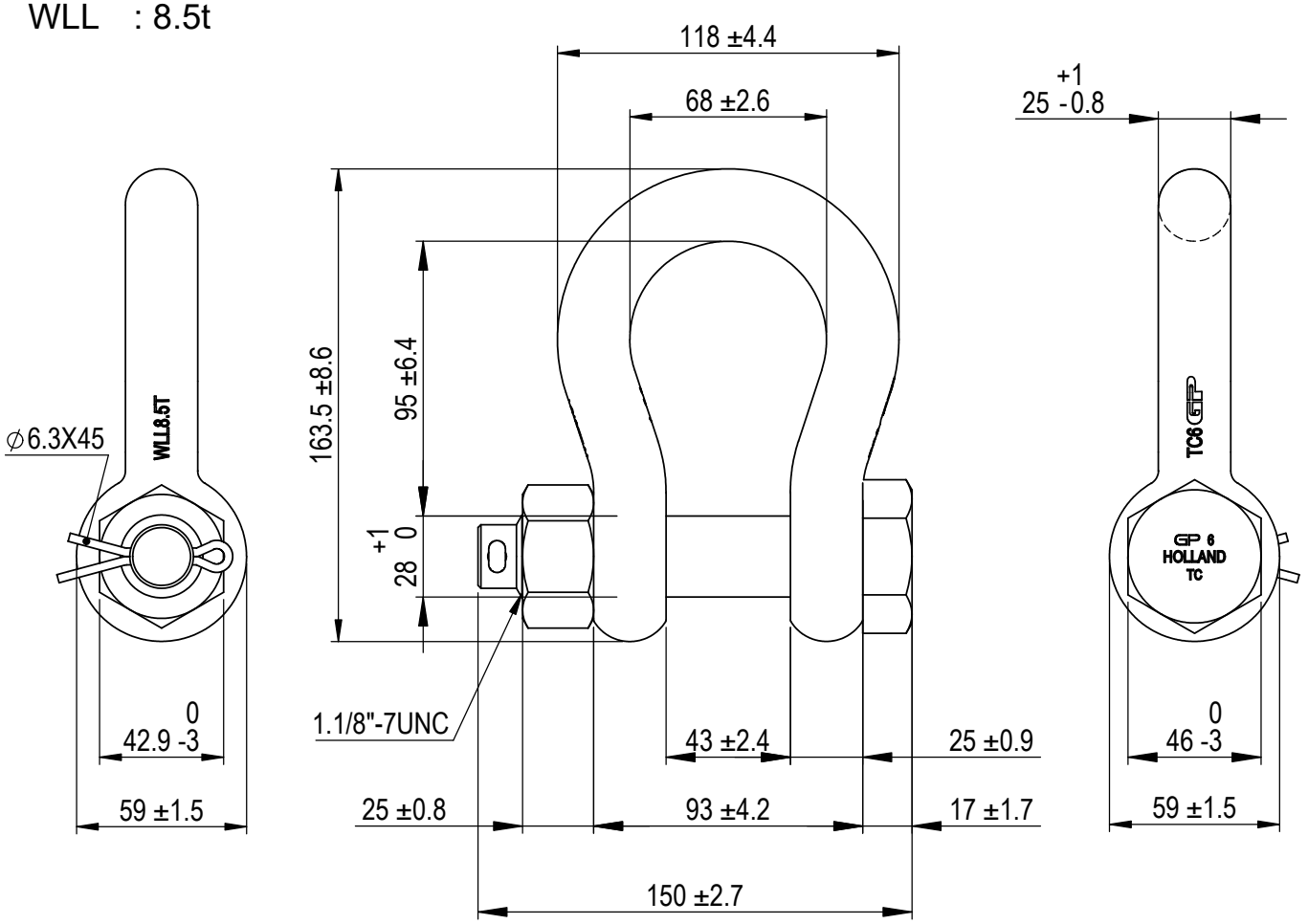


We reserve the right to make amendments on specifications in this drawing without prior notification.

| Rev. | Description | Date | Drawn |
|---|---|---|---|
| A | Drawing updated | 2022-1-1 | DL |
| 0 | First Issue | 31-07-09 | H.T. |

Copyright by Van Beest B.V. moreover this document is the property of Van Beest B.V. This document or any part of it may neither be made known, copied or multiplied, nor used for any purpose other than that for which it is specifically furnished, without the prior written consent of Van Beest B.V.

Green Pin®
P.O. Box 57, 3360 AB Sliedrecht (The Netherlands)
Industrieweg 6, 3361 HJ Sliedrecht
Tel. +31(0)184-413300 www.greenpin.com

Format A4
Scale 1:2.5

Title Green Pin® Bow Shackle BN
Standard bow shackle with safety bolt

Remark
G-4163
GPGHMB25

Drawing number 5008
Rev. A