Green Pin® Long Rotating Hoist Ring GR8
Group : ADAL
Part : GPADA10L125
WLL : 0.7t

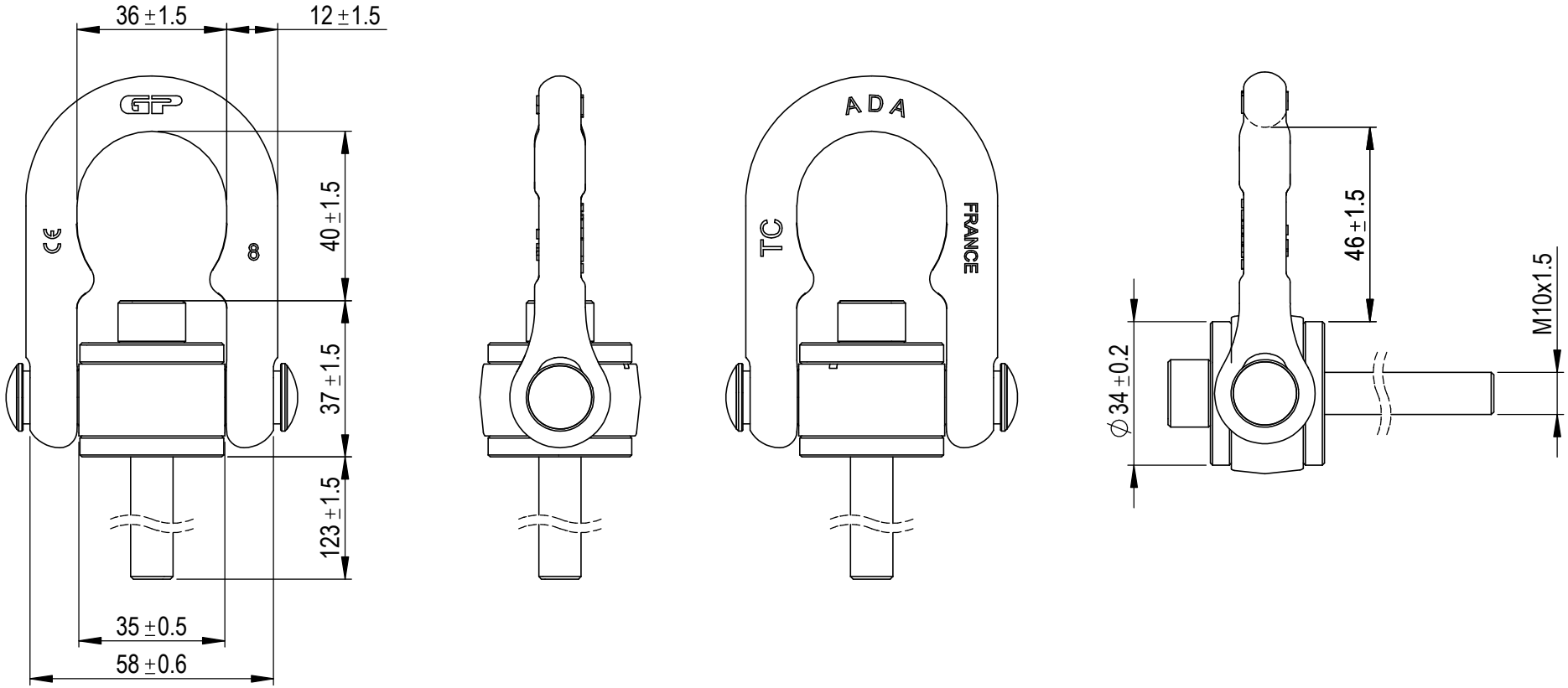

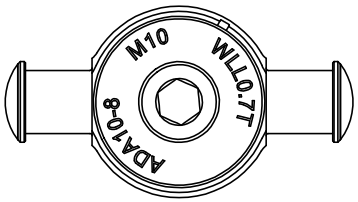

Rev.	Description	Date	Drawn
0	First Issue	2019-9-18	R.CH

Green Pin®
P.O. Box 57, 3360 AB Sliedrecht (The Netherlands)
Industrieweg 6, 3361 HJ Sliedrecht
Tel. +31(0)184-413300 www.greenpin.com

Copyright by Van Beest B.V. moreover this document is the property of Van Beest B.V. This document or any part of it may neither be made known, copied or multiplied, nor used for any purpose other than that for which it is specifically furnished, without the prior written consent of Van Beest B.V.

Format A4
Scale 1:1.5

Title Green Pin® Long Rotating Hoist Ring GR8

Remark
ADAL
GPADA10L125

Drawing number 7703

Rev. 0

We reserve the right to make amendments on specifications in this drawing without prior notification.