Green Pin® turnbuckles Eye-Hook
Group : G-6314
Part : SSGPHO1209
WLL : 1t

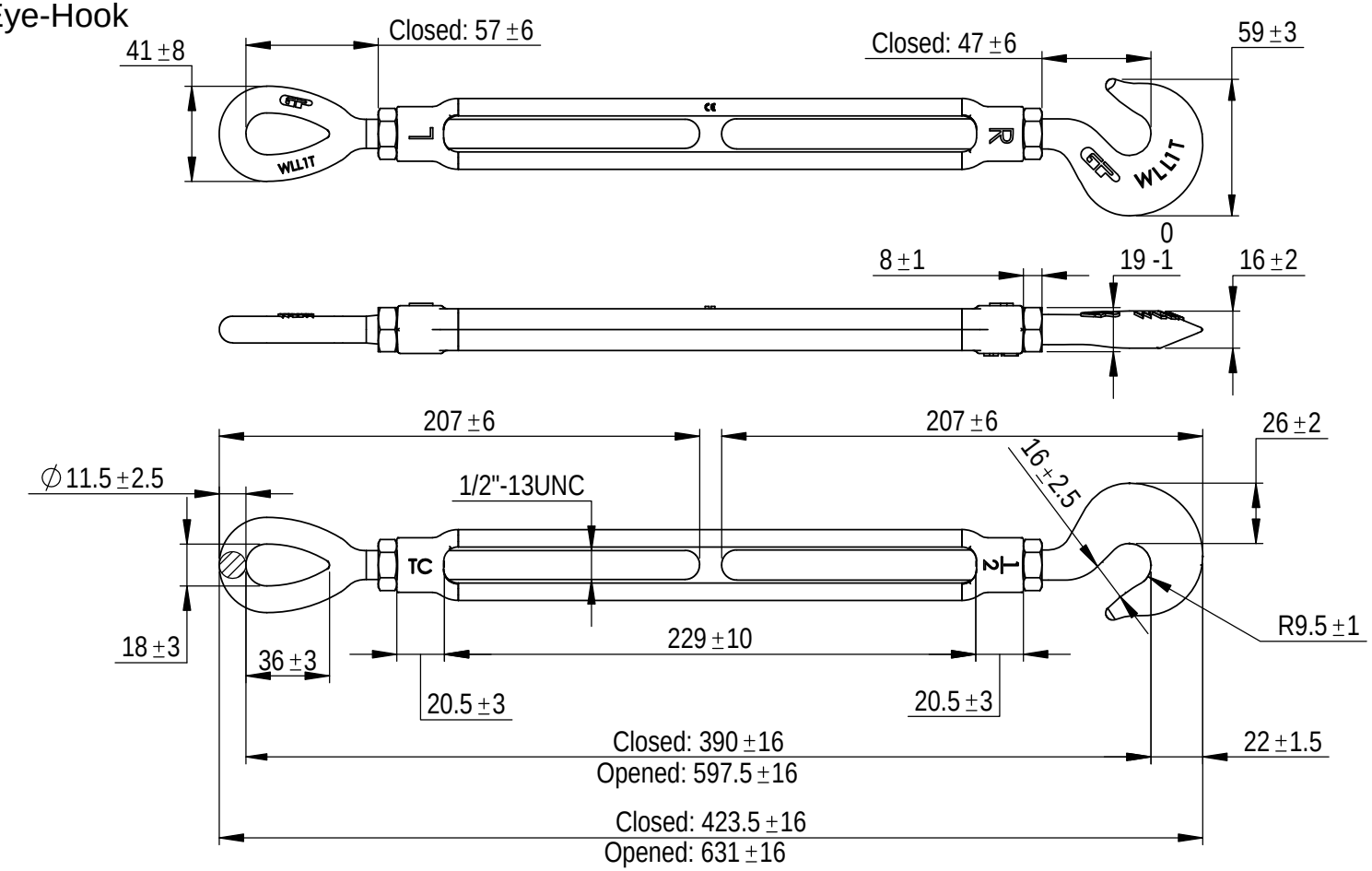

Rev.	Description	Date	Drawn
0	First Issue	2013-10-1	R.CH

Copyright by Van Beest B.V. moreover this document is the property of Van Beest B.V. This document or any part of it may neither be made known, copied or multiplied, nor used for any purpose other than that for which it is specifically furnished, without the prior written consent of Van Beest B.V.

VAN BEEST
P.O. Box 57, 3360 AB Sliedrecht
(The Netherlands)
Industrieweg 6, 3361 HJ Sliedrecht
Tel. +31(0)184-413300 www.vanbeest.nl

Format A4
Scale 1:3

Title Green Pin® turnbuckles Eye-Hook generally to ASTM F1145-92

Remark
G-6314
SSGPHO1209

Drawing number 5502
Rev. 0

We reserve the right to make amendments on specifications in this drawing without prior notification.