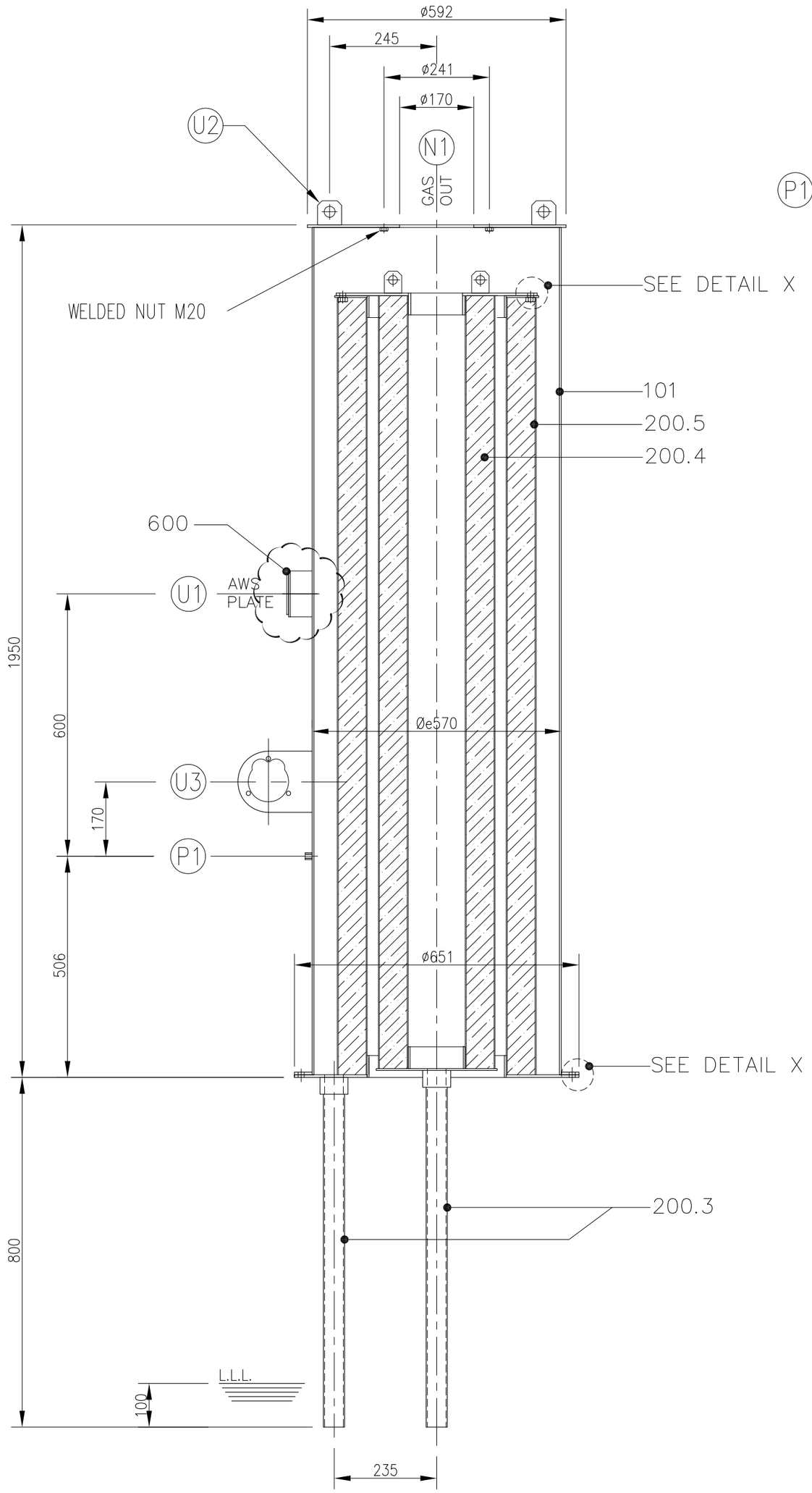

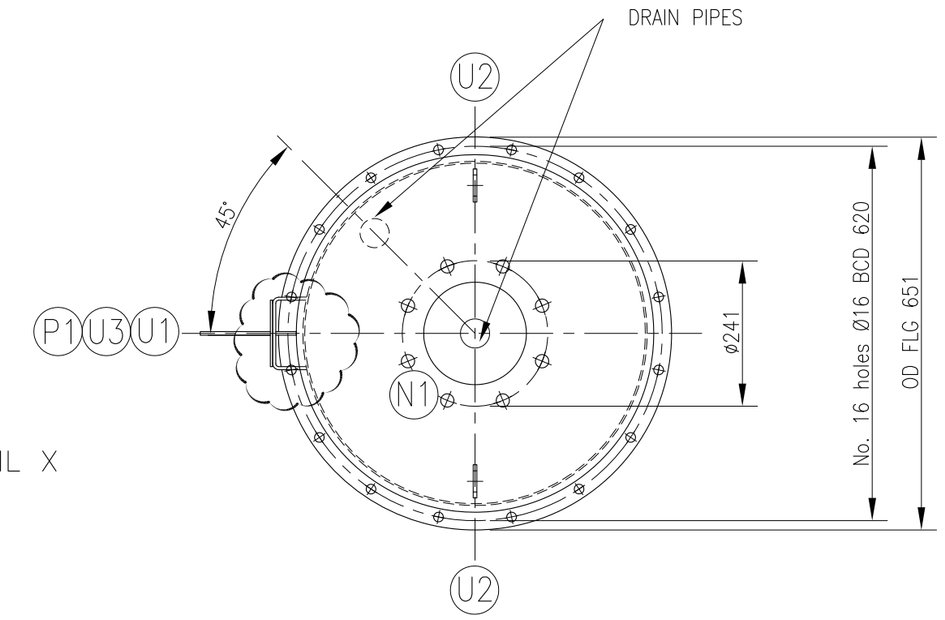

ORIENTATION PLAN

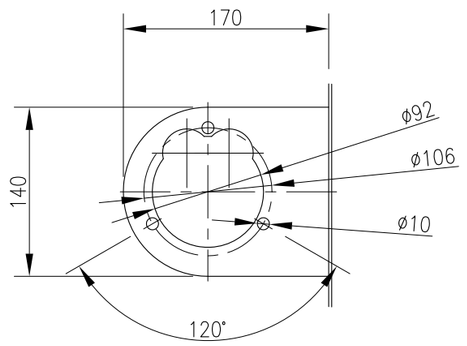

SUPP. FOR PRESS. INDIC. DETAIL (U3)

See Note

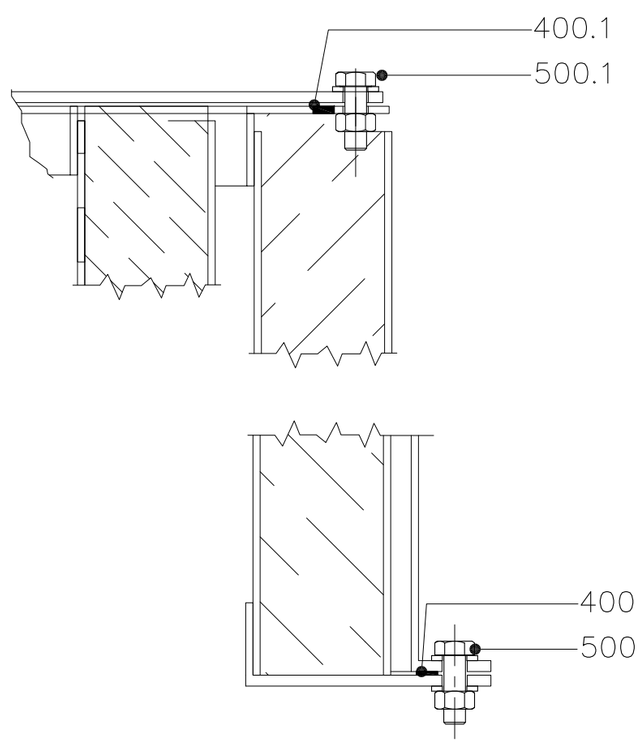

DETAIL X

FASTENERS AND GASKETS

PARTS LIST

Part No.	Description	Pcs	Material	Dimension	Code
101	VESSEL	1	AISI 304L	ø570–lg.1950	
200.4	INTERNAL FIBERWIND	1	AISI 304L	ø267–lg.1768	BMSFF–2671768
200.5	EXTERNAL FIBERWIND	1	AISI 304L	ø462–lg.1778	BMPRF–4621778
400	LOWER GASKET	2mt.	PTFE	10x3	
400.1	UPPER GASKET	1,6mt	PTFE	10x3	
500	SCREW+NUT+DBL WASHER	16	AISI 304L	M12x35	
500.1	SCREW+WASHER	12	AISI 304L	M12x35	
200.3	DRAIN LEG	2	AISI 304L	1"1/4 – O.D.42,2	
600	NAMEPLATE	1	AL	110x95x1	

NOZZLES LIST

Pos	Service	Pcs	Material	Dimension	Rating
N1	OUTLET	1	AISI 304L	DRILLING 6" #150	–
P1	PRESSURE TAP	1	AISI 304L	H/COUPLING 1/8" BSPTF	–
U1	NAME PLATE SUPPORT	1	AISI 304L	120x105 Thk.3	–
U2	LIFTING LUG	2	AISI 304L	55x55 Thk.6 holeID25	–
U3	SUPPORT FOR PRESS. INDIC.	1	AISI 304L	as per dwg	–

DESIGN DATA

DESIGN TEMPERATURE:	100°C	ERECTION WEIGHT: (Complete of Fibrewind)	~190 Kg
DESIGN PRESSURE:	±200mm H_2O	OPERATING WEIGHT: (Complete of Fibrewind)	~250 Kg

TESTING

- PNEUMATIC LEAK TEST ACCORDING TO ASME 31.3

NOTE

- ALL WELDS TO BE CONTINUOUS FILLET WELDS. MINIMUM WELD = 0.7*THICKNESS OF THINNEST MATERIAL BEING WELDED.
- ALL BOLTS HOLE IN FLANGE TO STRADDLE CL.
- THE EQUIPMENT IS NOT DESIGNED TO SUPPORT DUCTS, PIPES, PLATFORM AND LADDERS.
- SURFACE TREATMENT: WELD BEADS PICKLED AND PASSIVATED
- SUPPORT OF DIFFERENTIAL PRESSURE GAUGE FITS FOR GAUGE TYPE DWYER SERIE 2000

REV.	DATE	DESCRIZIONE	DIS./DRAWN	CONTR./CHECK	APPR.
01	23/08/16	MODIFIED NAMEPLATE SUPPORT	NM	MG	AWN
00	10/05/16	STD DRAWING FOR CONSTRUCTION	NM	MG	MGA

CUSTOMER / PLANT

CUSTOMER: –
P.O.: –
USER:
PLANT SIDE:
SERVICE: FIBREWIND MIST ELIMINATOR

REFERENCE:

TOWER DIA :
VESSEL No :
JOB : –

AWS CORPORATION

TITOLO/TITLE

OIL MIST COALESCER MODEL 779B–24 GENERAL ARRANGEMENT

measures in mm

SCALA/SCALE	F.TO	COMMESSA/JOB	INDICAZIONE DOCUMENTO							
			W.B.S.		DISC.	ATT.	TIPO	NUMERO	FOGLIO N°	REV.
			UNITA'	SISTEMA						
1:10	A2	779B––––			M	D	Y	025	001 DI 001	01